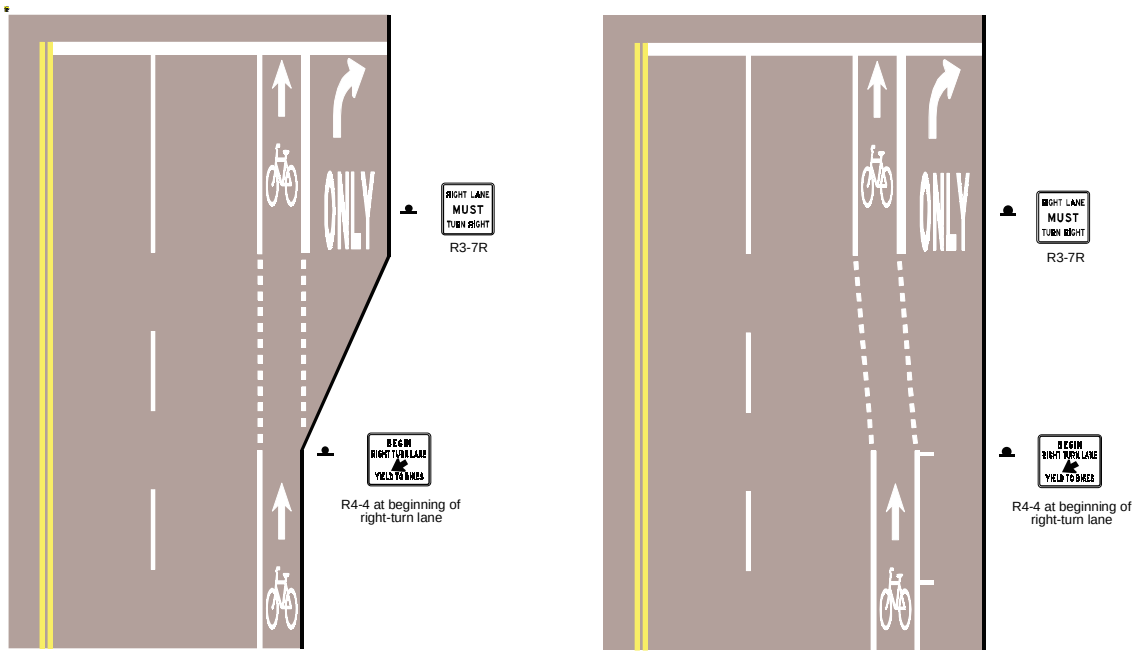

a. Right-turn-only lane

b. Parking lane into right-turn-only lane

NOTE: The dotted lines in cases “a” and “b” are optional (see case “c”.)

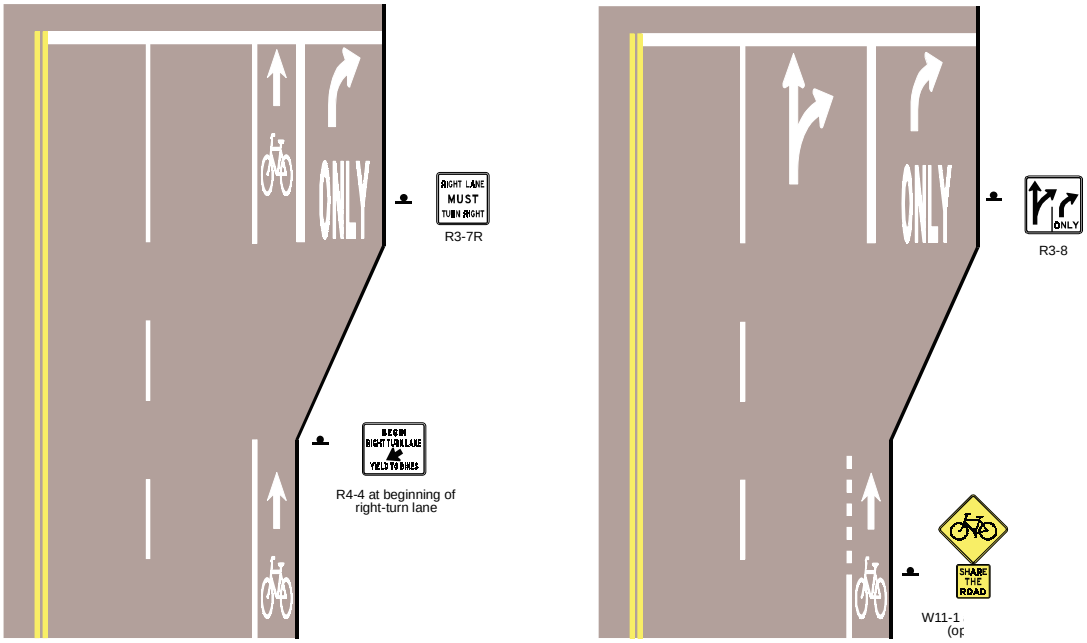

c. Right-turn-only lane

d. Optional right/straight and right-turn-only l

Figure 11. Bike Lanes Approaching Right-Turn-Only Lanes

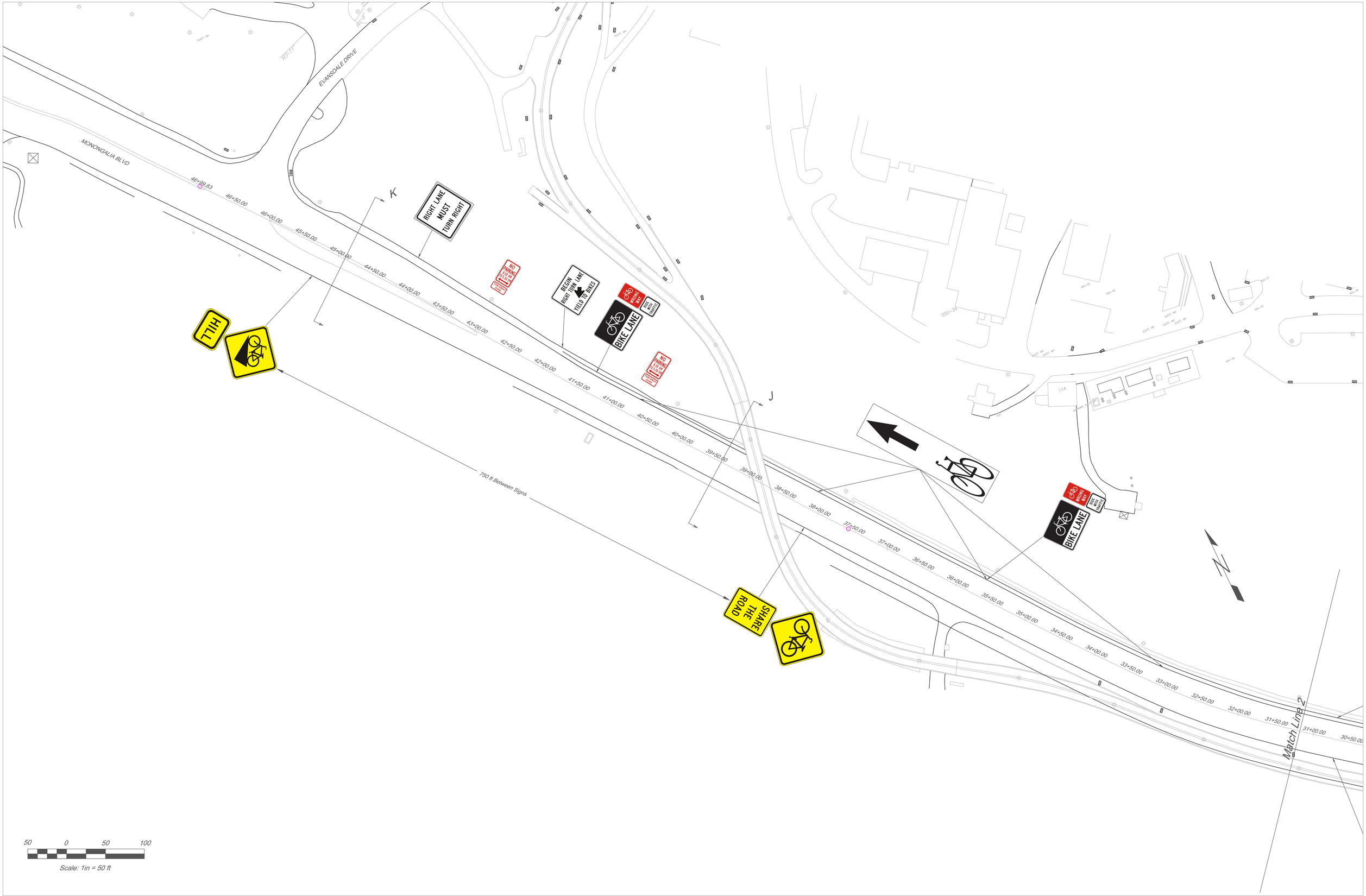
MONONGALIA BLVD
EVANSDALE DRIVE
46+99.83
46+50.00
46+00.00
45+50.00
45+00.00
44+50.00
44+00.00
43+50.00
43+00.00
42+50.00
42+00.00
41+50.00
41+00.00
40+50.00
40+00.00
39+50.00
39+00.00
38+50.00
38+00.00
37+50.00
37+00.00
36+50.00
36+00.00
35+50.00
35+00.00
34+50.00
34+00.00
33+50.00
33+00.00
32+50.00
32+00.00
31+50.00
31+00.00
30+50.00
K
J
RIGHT LANE MUST TURN RIGHT
NO PARKING 6:30 AM - 9:30 AM MON-FRI
BEGIN RIGHT TURN LANE YIELD TO BIKES
BIKE LANE
WRONG WAY
BIKES BUFFER
HILL
750 ft Between Signs
SHARE THE ROAD
Match Line 2
114
SSU-34
N
50 0 50 100
Scale: 1in = 50 ft

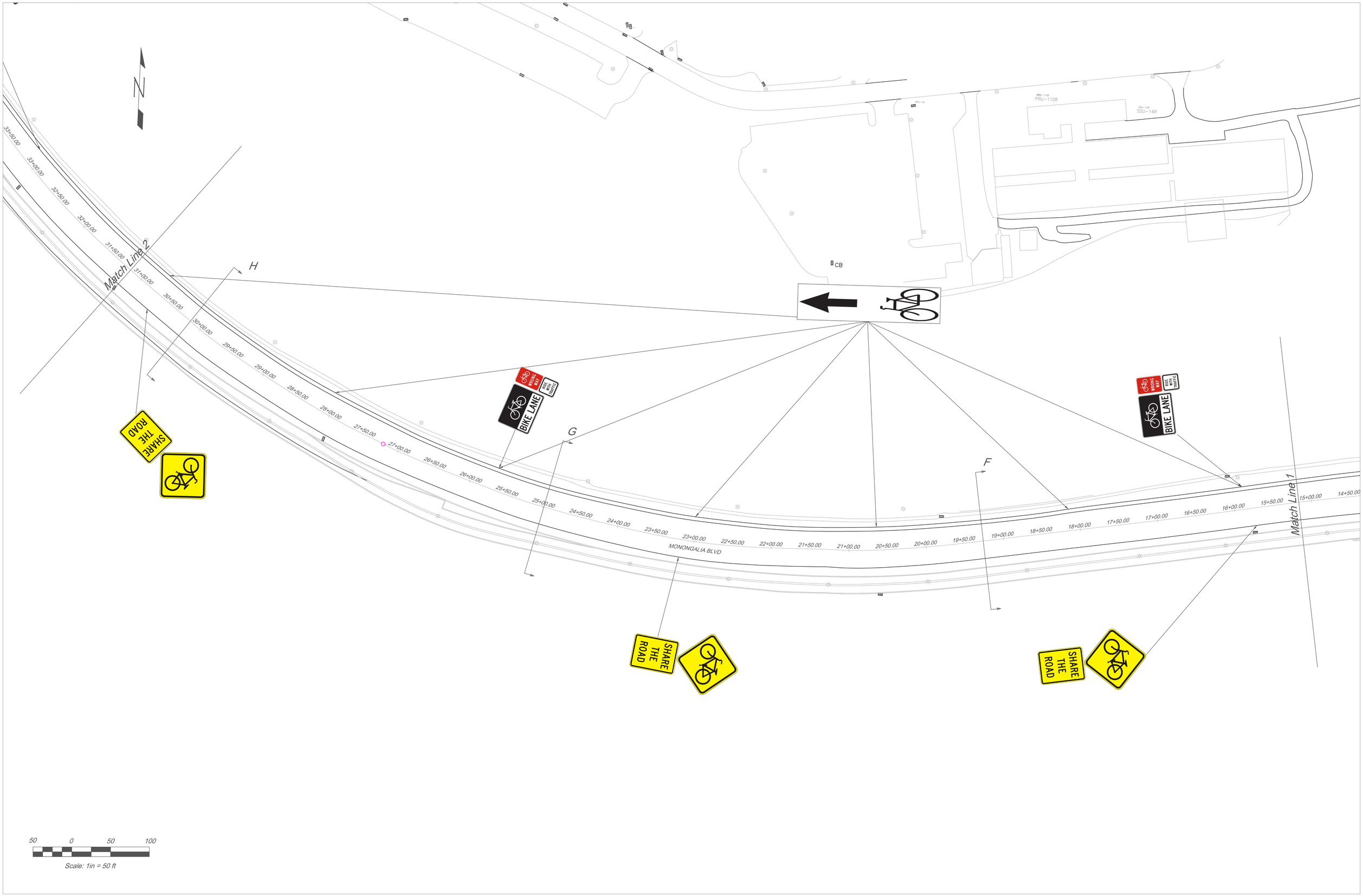
N
Match Line 2
Match Line 1
MONONGALIA BLVD
H
G
F
CB
PRU-110R
SSU-14R
33+50.00
33+00.00
32+50.00
32+00.00
31+50.00
31+00.00
30+50.00
30+00.00
29+50.00
29+00.00
28+50.00
28+00.00
27+50.00
27+00.00
26+50.00
26+00.00
25+50.00
25+00.00
24+50.00
24+00.00
23+50.00
23+00.00
22+50.00
22+00.00
21+50.00
21+00.00
20+50.00
20+00.00
19+50.00
19+00.00
18+50.00
18+00.00
17+50.00
17+00.00
16+50.00
16+00.00
15+50.00
15+00.00
14+50.00
WRONG WAY
FACE WITH WRONG
BIKE LANE
SHARE THE ROAD
50 0 50 100
Scale: 1in = 50 ft

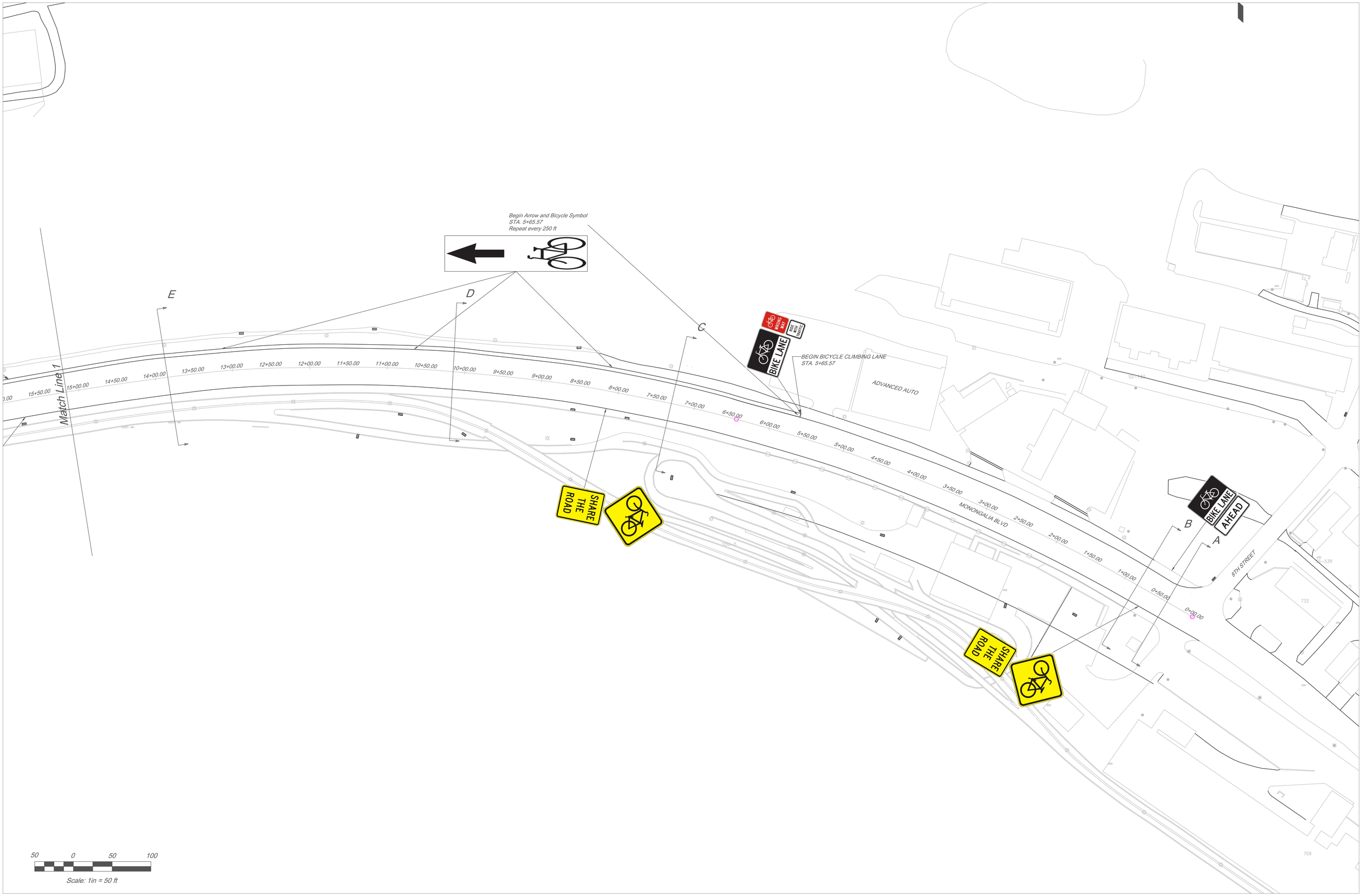
Begin Arrow and Bicycle Symbol
STA. 5+65.57
Repeat every 250 ft
BEGIN BICYCLE CLIMBING LANE
STA. 5+65.57
BIKE LANE
WRONG WAY
RIDE WITH TRAFFIC
SHARE THE ROAD
BIKE LANE
AHEAD
ADVANCED AUTO
MONONGALIA BLVD
6TH STREET
Match Line 1
A
B
C
D
E
15+50.00
15+00.00
14+50.00
14+00.00
13+50.00
13+00.00
12+50.00
12+00.00
11+50.00
11+00.00
10+50.00
10+00.00
9+50.00
9+00.00
8+50.00
8+00.00
7+50.00
7+00.00
6+50.00
6+00.00
5+50.00
5+00.00
4+50.00
4+00.00
3+50.00
3+00.00
2+50.00
2+00.00
1+50.00
1+00.00
0+50.00
0+00.00
732
709
50 0 50 100
Scale: 1in = 50 ft

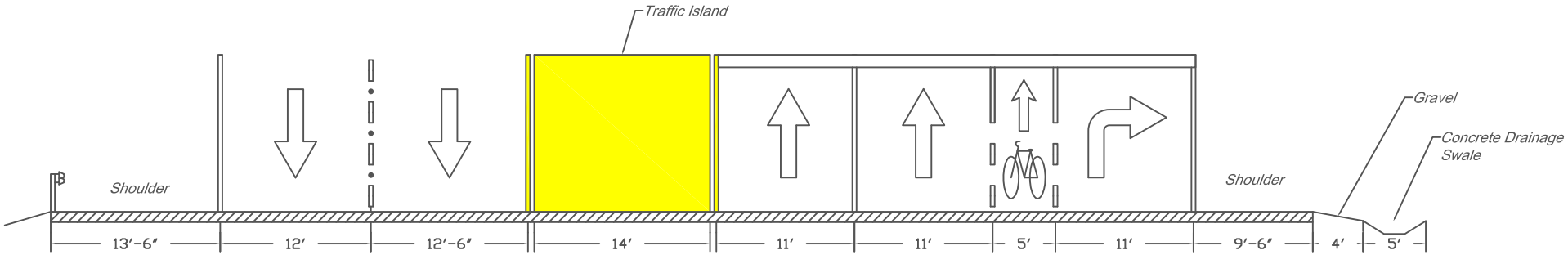

Cross-section K

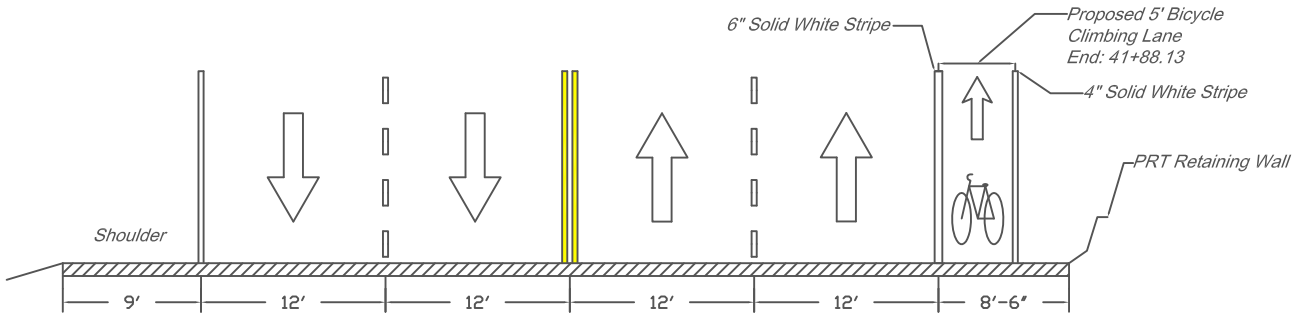

Cross-section J

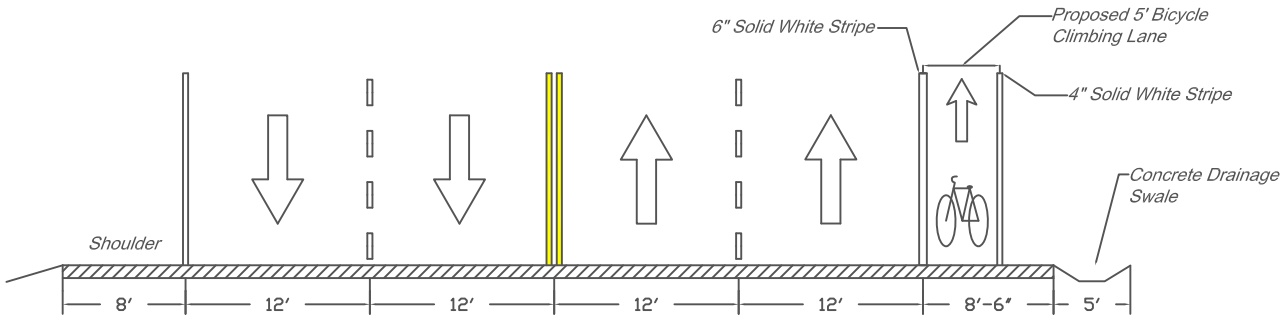

Cross-section H

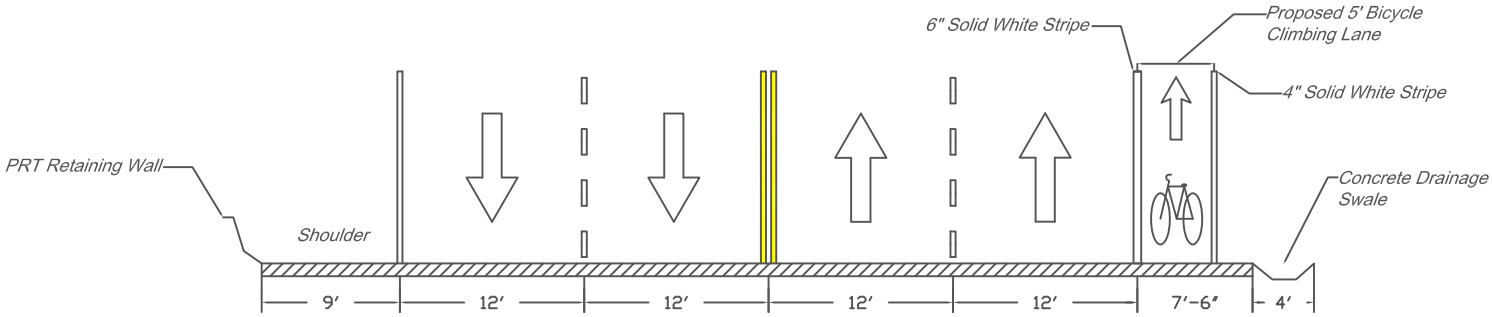

Cross-section G

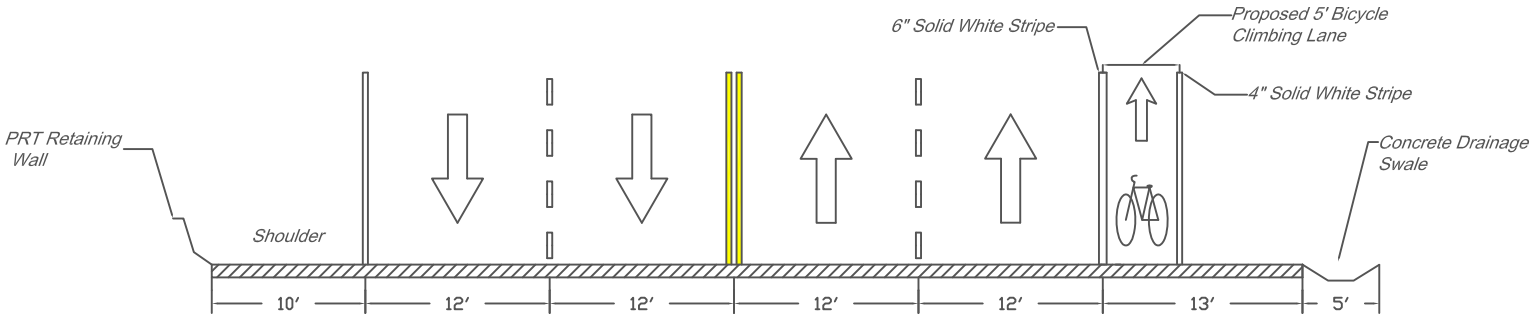

Cross-section F

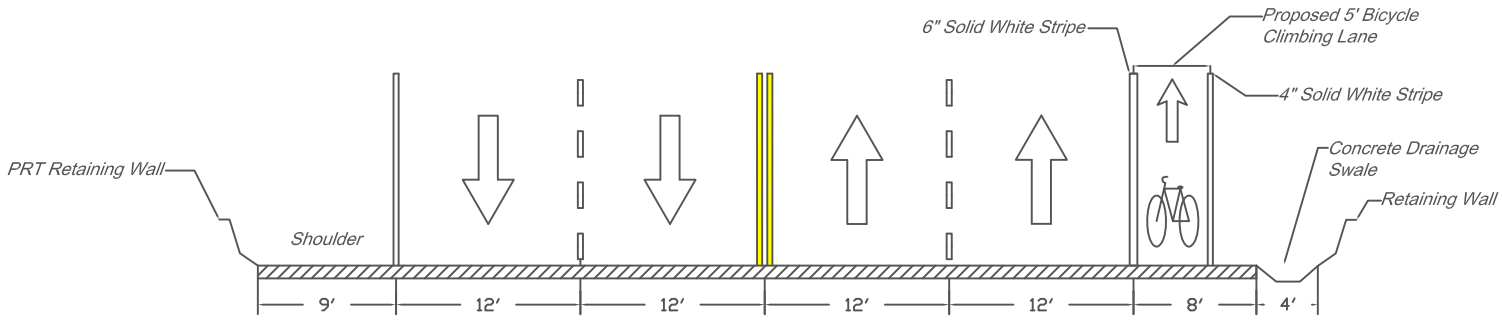

Cross-section E

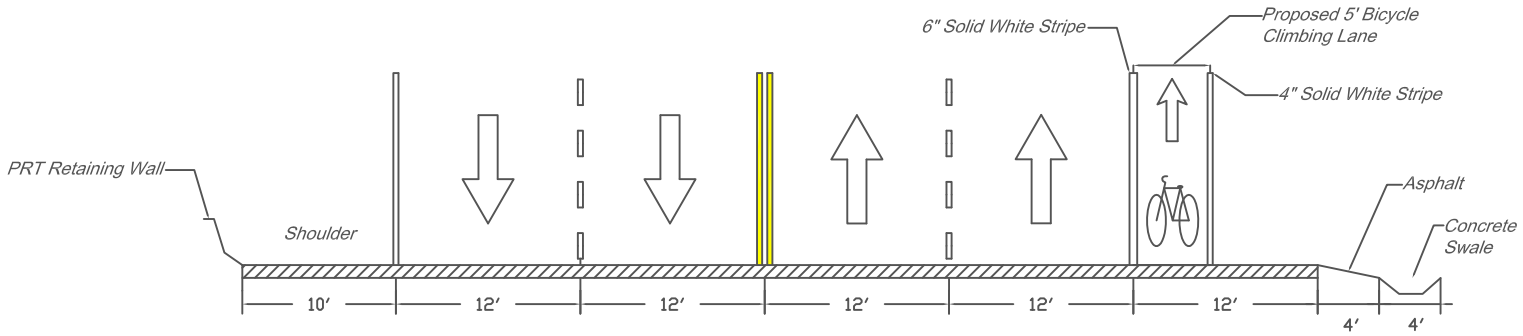

Cross-section D

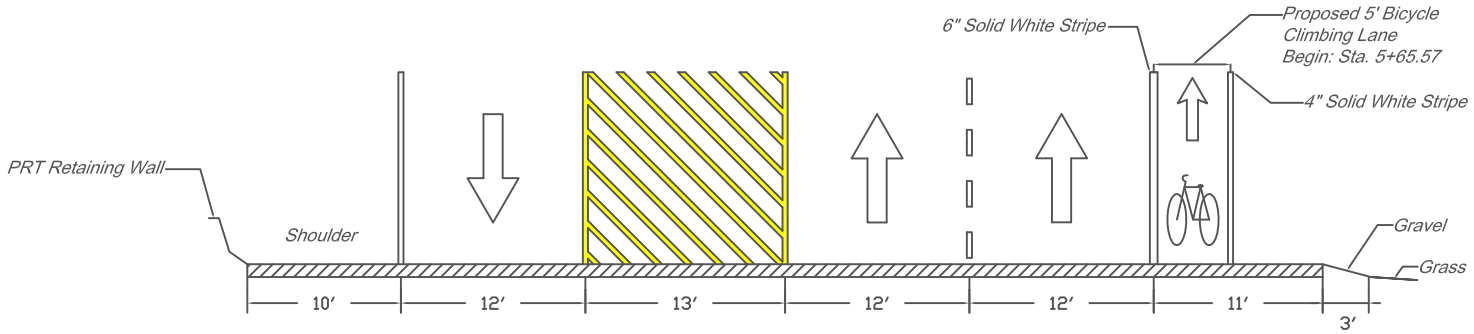

Cross-section C

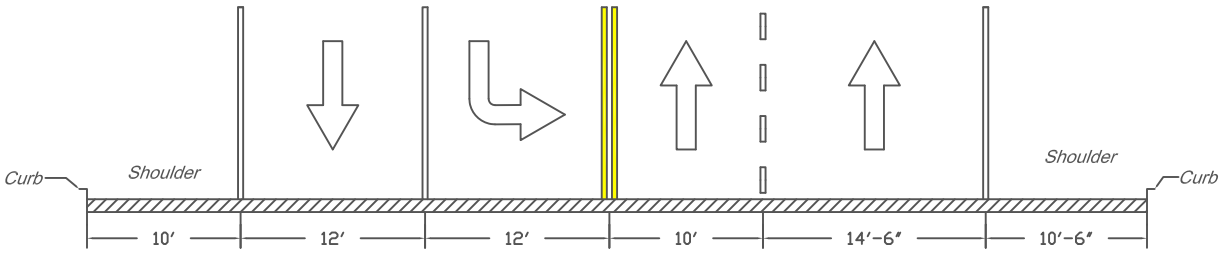

Cross-section B

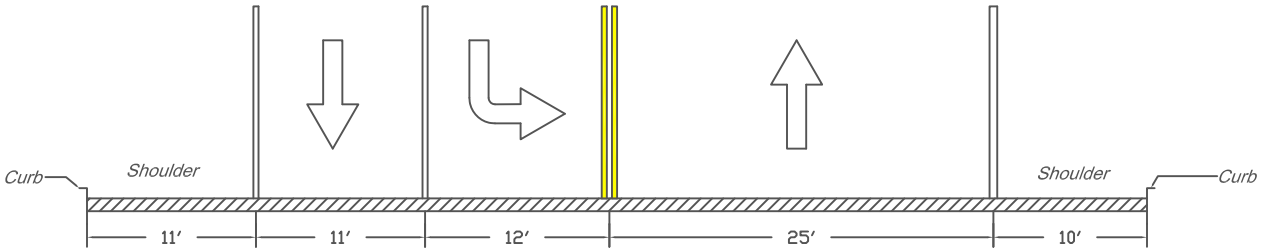

Cross-section A